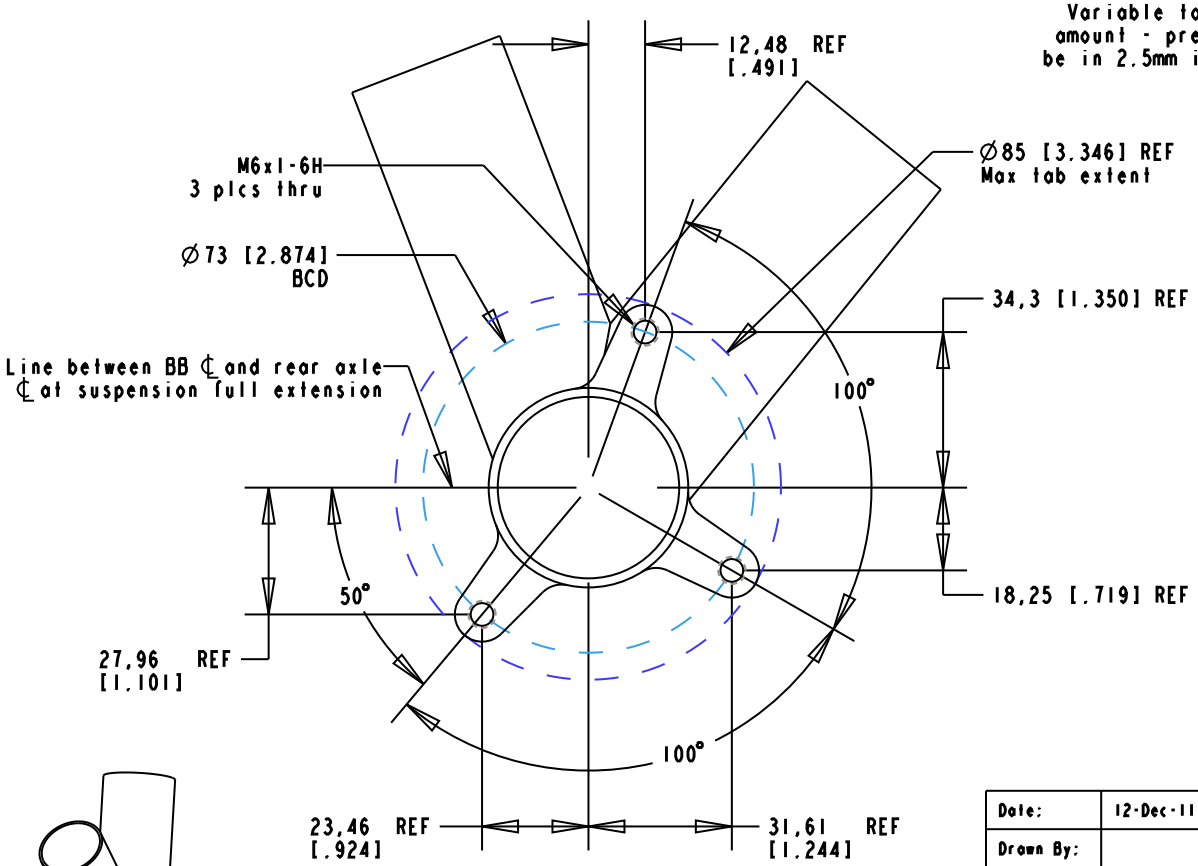

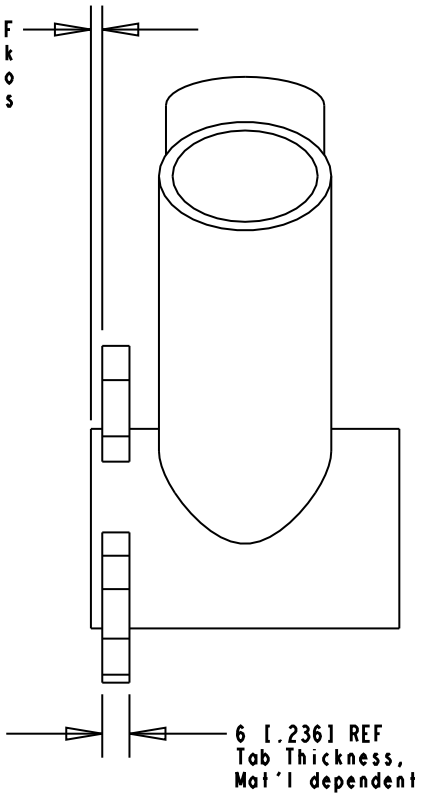

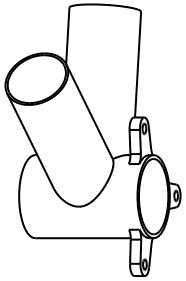

Part #	n/a

All Dimensions Are In mm
Unless Otherwise Indicated

Tolerances:
Linear .x ± 0.05, .xx ± 0.005
Ø .x ± 0.1, .xx ± 0.01
Angles ± 1°

Or as Otherwise Indicated

Date:	12-Dec-11
Drawn By:	
Checked By:	n/a
Material:	n/a
Finish:	n/a

INTERPRET PER ANSI Y14.5

CAD Generated Drawing
Do Not Manually Update

Eko Sport, Inc

TITLE
ISCG-05 Mount Standard

Pro/E Drawing File
ISCG-05_STANDARD

SIZE A	SCALE 0.600	SHEET 1 OF 1