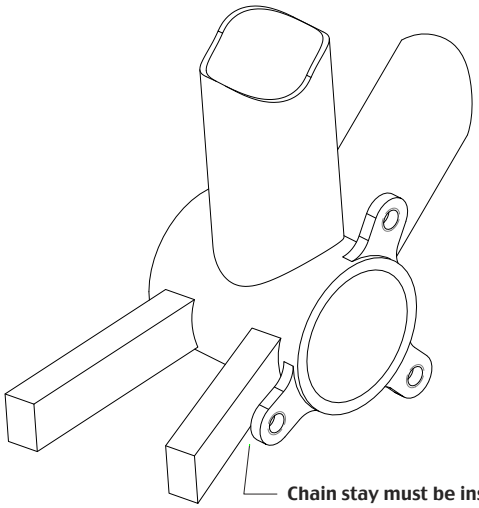

Chain stay must be inside the outer face of the ISCG tab to a distance no less than 2" radius from the center of the bottom bracket.

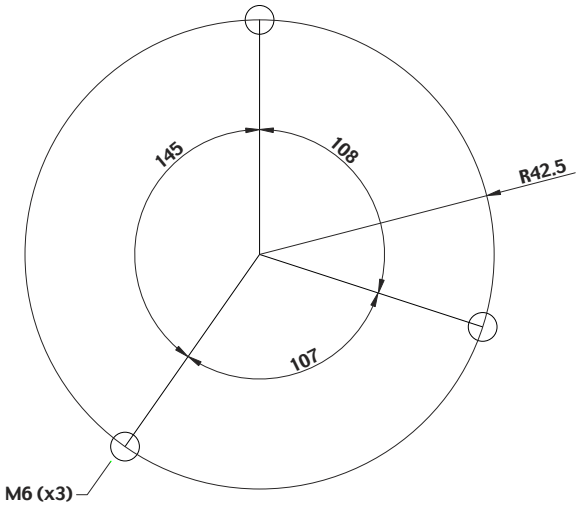


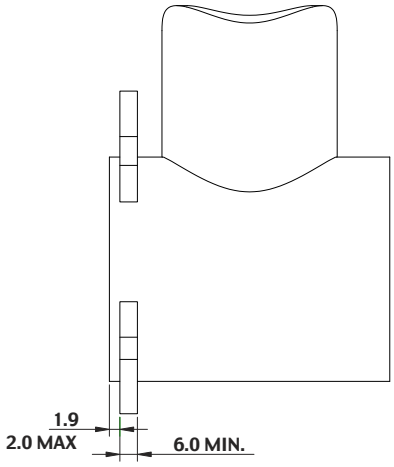


## All DIMENSIONS IN MILLIMETERS

| | | | |
|---|---|---|---|
| UNLESS OTHERWISE SPECIFIED ALL DIMENSIONS IN INCHES | DRAWN | RAB | DATE 8/5/02 |
| | APVD | | DATE |
| | APVD | | DATE |
| TOLERANCES: SIZE .X ± .020 .XX ± .010 .XXX ± .005 ANGLE X ± .5 XX ± .5 XXX ± .5 | MATERIAL N/A | | |
| REMOVE ALL BURRS AND BREAK SHARP EDGES .02 MAX | | | |
| SURFACE ROUGHNESS 63/ | FINISH NONE | | |
| DIMENSIONS ARE BEFORE PLATING OR COATING | | | |
| 3rd ANGLE PROJECTION | DO NOT SCALE DRAWING | | |

MountianSpeed, Inc.
8824 S.W. 35th AVE, Portland, Oregon 97219
PH:503/244-8368 FAX:503/892-9813

TITLE
ISCG-2-BMX

DWG SZ C
SCALE AS NOTED
SHEET 1 OF 1
DWG NO ISCG-2-BMX
REV 01